HYOSUNG TNS

HYOSUNG 5L

Operator Manual

V01.00.00

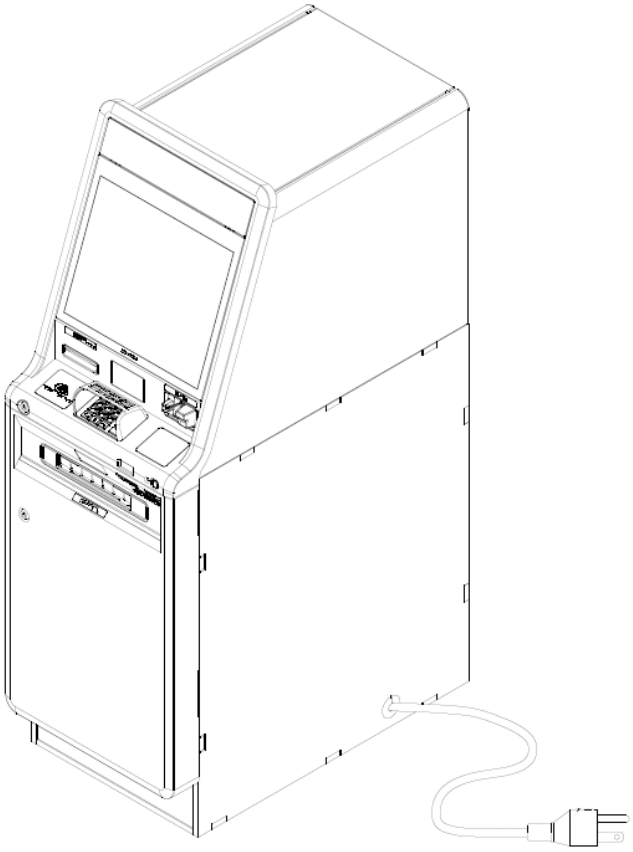

In this document, a licensed product of HYOSUNG TNS. INC ("HYOSUNG") is described. MONiMAX is a trademark of HYOSUNG.

Under the terms and conditions of an agreement you have with HYOSUNG, where creation of derivative works, modifications or copies of this HYOSUNG copyrighted documentation is permitted, HYOSUNG's copyright notice must be included.

As new technology, components, software and firmware become available, HYOSUNG reserves the right to change specifications without prior notice.

All features, functions and operations described in this document may not be marketed by HYOSUNG in all parts of the world. In some instances, photographs are of equipment prototypes. sold by HYOSUNG in all regions worldwide. Therefore, before using this document, contact with your HYOSUNG representative or HYOSUNG office for information that is applicable and current.

HYOSUNG Proprietary Information – not to be disclosed or reproduced without written consent.

© 2022 HYOSUNG TNS. INC,, Seoul, Korea. https://hyosung-tns.com.
All Rights Reserved

Table of contents

Introduction

Description of Product

Operation

 © 2022 **Hyosung TNS.** All rights reserved.

 © 2022 **Hyosung TNS.** All rights reserved.

Introduction

Audience

Customers and staffs of Hyosung TNS who use and operator HYOSUNG 5L in each branches of bank.

About This Document

The document is organized into sections covering the following topics:

- Introduction - this section
- Product Specifications
- Operation

Each page has been laid out as follows:

<Note> In case of printing, A4 size paper is recommended.

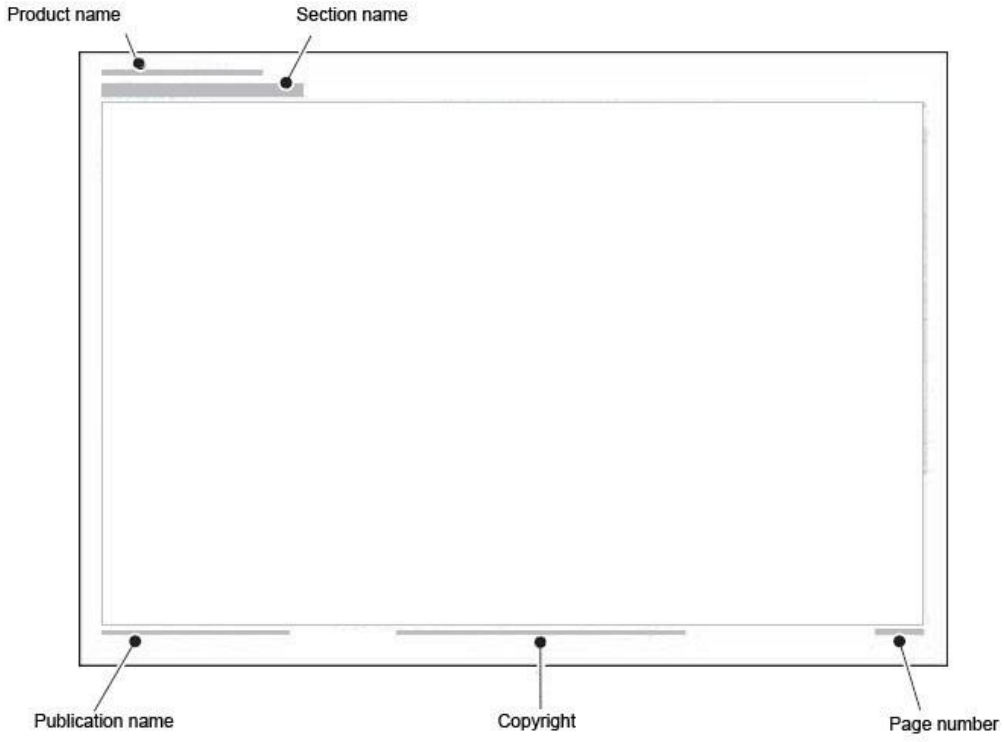

 © 2022 **Hyosung TNS.** All rights reserved.

Introduction

Safety precautions

Common safety precaution

- Safety Precautions in outlined this manual provide information on safe and proper handling of the product. Non-compliance of the safety precautions may result in injury or damage to the product.
- This precaution symbol with sample term tells you safety warnings during equipment handlings.

Please read the following instructions before operating equipment.

- Operate equipment in the order outlined in this manual.
- Follow precautions indicated in this manual, as well as the equipment itself. Failure to properly address these precautions may lead to injury or damage to the product.
- Avoid operations not addressed in this manual.
- If you cannot remedy system problems using the methods outlined in this manual, please refer to contact information listed in the manual.
- Any change or modifications in construction of this device which are not expressly approved by the party responsible for compliance could void the user's authority to operate the equipment.

<Note!>

This equipment has been tested and found to comply with the limits for a Class A digital device, pursuant to part 15 of the FCC Rules. These limits are designed to provide reasonable protection against harmful interference when the equipment is operated in a commercial environment. This equipment generates, uses, and can radiate radio frequency energy and, if not installed and used in accordance with the instruction manual, may cause harmful interference to radio communications. Operation of this equipment in a residential area is likely to cause harmful interference in which case the user will be required to correct the interference at his own expense.

▶ CAUTION

1. To reduce the risk of fire, use only No. 26 AWG OR LARGER Telecommunication cord
2. Risk of explosion if battery is replaced by an incorrect type.
   Dispose used batteries according to the instructions.
3. For pluggable equipment, the socket-outlet shall be installed near the equipment and shall be easily accessible.
4. The equipment is to be secured to the building structure before operation

 © 2022 **Hyosung TNS.** All rights reserved.

Introduction

5. A security container shall be permitted to optionally be provided with a secondary lock, but improper use of the secondary lock feature will reduce the security level of the ATM.

Description of precaution symbols

Electrical Shock Warning

- Do not remove cover. Only a maintenance engineer is allowed to open the cover.
- Do not touch. You may receive electric shock.
- Make sure to turn off the power when servicing the equipment.

High Temperature Warning

- Do not touch the equipment when it is running.
- The equipment can get extremely hot and may cause a burn.
- Make sure to close the cover before running the equipment.

Use Precaution when Moving

- The equipment is heavy. Make sure at least 2 people lift or move the equipment.
- Do not attempt to move the equipment alone. You may be injured from dropping the heavy equipment.

Fire Hazard

- Place the equipment in an area away from any combustible materials.
- The equipment may catch on fire from overheating or short circuit of the power supply unit.

Disassembly Warnings

- Do not disassemble or modify the equipment unless you are a certified engineer.
- Contact the service center for maintenance, adjustments and repairs.
- Improper disassembly may cause fire or electrical shock.

Collapse Precautions

- Do not place the equipment where the floor cannot sustain the weight of the equipment, or on slanted or unstable surface.
- Equipment may fall and cause injury or damage.

Unplug the Equipment

- Stop using the equipment immediately if it smokes, emits an unusual smell, makes abnormal sounds, or if liquids or other foreign materials enter the equipment.
- If the above-mentioned abnormalities occur, immediately turn off the power,

 © 2022 **Hyosung TNS.** All rights reserved.

Introduction

unplug the equipment and contact the service center.

- If you ignore these symptoms, the equipment may catch on fire or cause electric shock.

 © 2022 **Hyosung TNS.** All rights reserved.

Introduction

Abbreviations

#	Abbreviations	Description
1	AD board	Analog to Digital conversion Board
2	ADA	The American Disabilities Act
3	AP	Application Program
4	Assy	Assembly
5	BATT S/W	Battery Switch
6	CAM	Camera Unit
7	CDU	Cash Dispenser Unit
8	CE	Control Electronics
9	Earphone Jack	Voice Converter for Visually Disabled Persons (ADA)
10	EMV	Europay, Mastercard, Visa
11	EP	Elementary Program
12	EPP	Encryption PIN Pad
13	H/W	Hardware
14	I/F	Interface
15	ISO	International Standard Organization
16	JPR	Journal Printer
17	LCD	Liquid Crystal Display
18	MCU	Magnetic Card Unit
19	OPL	Operation Panel for Customers to Operate
20	OSD board	On Screen Display Board
21	P/S	Power Supply

 © 2022 **Hyosung TNS.** All rights reserved.

Introduction

#	Abbreviations	Description
22	PIN	Personal Identification Number
23	PNC	Panel Control Board
24	PTR	Printer (mainly Receipt Printer)
25	S/W	Switch
26	SIU	Sensor and Indications Unit
27	SP	Service Provider
28	SPR	Slip Printer (Receipt Printer)
29	TTU	Text Terminal Unit (OPL or SPL)
30	VFD	Vacuum Fluorescent Display

 © 2022 **Hyosung TNS.** All rights reserved.

Introduction

Document revisions

Revision	Date	Change summary
V01.00.00	2022-8-9	New Publication

© 2022 **Hyosung TNS.** All rights reserved.

Description of Product

HYOSUNG 5L Specifications

Item			Specification	Remarks (Option)
Main Controller (Q170)	CPU		i5-7500(3.4GHz)	
	Memory	DDR Memory	16GB	SO-DIMM DDR-Ⅳ
	Storage Device	1st Storage	512GB	2.5” SATA TYPE SSD
		2nd Storage	N/A	2.5” SATA TYPE
		ODD	N/A	
	Operating System		Windows 10	IoT 2019 LTSC
	TPM		Support	TPM2.0
	Expansion Slots		1-PCI-Express x16	
	Serial Ports		1 Port	
	USB Ports		14 Ports (3.0 2ea, 2.0 12ea)	
	VGA		On-Board Dual VGA(DVI, RGB)	
	LAN		10/100/1000Mbps On-Board	
	Status Display LED		HDD / PWR LED	
Customer Display	Display	Type	19” TFT LCD	DVI Interface
		Resolution	1280 X 1024	XVGA
		Brightness	250 cd/m²	
	Input Method		Touch Screen (P-CAP Type)	
	Privacy Filter		Support	
	Guide Light		SPR, MCU, CDU	White
Customer Input Method	Pin-Pad		PC KEY CAP EPP(PCI Compliant)	PCI 5.0
	Function Key		N/A	
	OPL Touch Screen		19” P-CAP Touch	

 © 2022 **Hyosung TNS.** All rights reserved.

Description of Product

Item			Specification	Remarks (Option)
Card Reader (SANKYO)	Type		Dip MCR	USB Interface
	Magnetic Stripe		ISO 1,2,3 Read	
	EMV Level-1,2		Available (IC CARD)	
	Reject Capacity		N/A	Motorized Support
	Card Return		N/A	Motorized Support
	Security	Anti-Skimming	Support	
		Anti-Card-Trapping	N/A	Motorized Support
		Anti-Shimming	N/A	
Receipt Printer (SPR60)	Printing Type		Thermal Line Printing	
	Printing speed		100mm/sec	
	Printing Width		80mm Max	
	Paper Specification	Type	Thermal Roll Paper	
		Width	Max. 80mm	
		Inner Diameter	18Φ	
		Outer Diameter	Max. 210Φ	
	Paper Roll Capacity		Approx. 5,000 Transactions (114mm/Trans.)	Depends on Format and Paper thickness
	Black Mark Paper Support		N/A	Optional Black Mark Paper
JPR	Journal Printer		E-Journal	
Cash	Shutter type		Automatic Shutter	

 © 2022 **Hyosung TNS.** All rights reserved.

Description of Product

Item			Specification	Remarks (Option)
Dispenser (CDU10)	Denomination		CST 1 20 USD CST 2 20 USD CST 3 20 USD CST 4 20 USD CST 5 20 USD	
	Maximum Dispense		50 Notes/1 transaction	
	Number of cassettes		5 Cassettes	
	Cassette Capacity		346 mm/1 cassette(about 2,800)	
	Dispensing Speed		6 notes/sec	
	Reject Type		Note by Note Reject (300 bills Max)	
	Retract		Bundle Retract (100 bills Max)	
	Number of Near-End Sensing		500 Notes Max	
Power Supply	Main Power	Input Voltage / Current	AC 100 ~ 240V ±10% / 10.0A	
		Frequency	47 ~ 63 Hz	NORMAL : 50/60Hz
	Battery back-up System		1 Transaction Support	
Safety & Security	Safety		UL 291 Level-1(Front Access)	
	Locking device		E-Lock	E-Lock (CENCON)
	Key Lock		Common Key	
	Alarm		N/A	
	Sensor		Door Sensor(Safety, Upper)	
	Camera		Support (1st Face, 2nd Hand)	CCD CAM

 © 2022 **Hyosung TNS.** All rights reserved.

Description of Product

Item			Specification	Remarks (Option)
	Anti-Cash Trapping		N/A	
Additional Function	Audio guidance		Sound Card On-Board	
	ADA Audio guidance		Volume Control Support	
	Barcode Reader		Support	Mindeo ES4650S
	Finger Print		N/A	
	RF		Support	Vivopay KioskⅣ
	Proximity sensor		N/A	
Dimension & Environment	Dimension (H X W X D)		1,513 x 470 x 847 (mm)	
	Install Method		Anchor	
	Weight		About 497 Kg	
	System Battery		Support	
	Operational Temperature	Operating	0°C ~ 40°C / 32°F ~ 104°F	
		Storage	-5°C ~ 50°C / 23°F ~ 122°F	
	Operational Humidity	Operating	25% ~ 86%	
		Storage	10% ~ 90%	

 © 2022 **Hyosung TNS.** All rights reserved.

Description of Product

Name of Each Portion

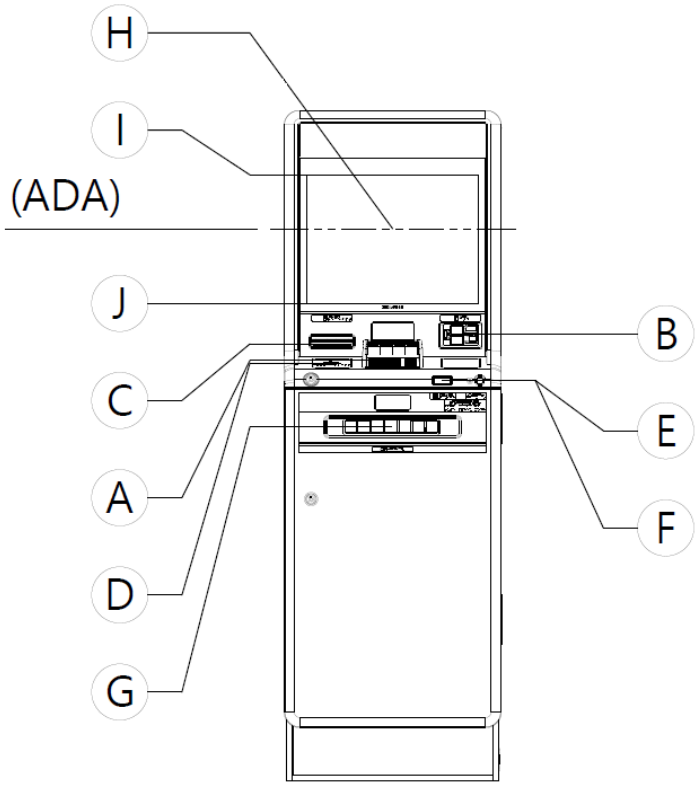

A	Encrypting PIN Pad
B	Card Reader
C	Receipt Printer
D	NFC
E	Barcode
F	Earphone Jack
G	Cash Dispenser
H	ADA Height
I	Screen Top
J	Screen Bottom

 © 2022 **Hyosung TNS.** All rights reserved.

Description of Product

Control Electronics (CE, PC)

The Control Electronics mainly consist of a motherboard, HDD, multiple serial card, and so on. Basic functions of the control electronics used in this ATM is similar to that of a personal computer you may have in your office or home with exception of a multiple USB HUB used to communicate with several devices such as a cash dispenser, card reader, receipt printer and EPP.

1. Specification

Item			Specification	Remarks (Option)
Main Controller (Q170)	CPU		i5-7500(3.4GHz)	
	Memory	DDR Memory	16GB	SO-DIMM DDR-Ⅳ
	Storage Device	1st Storage	512GB	2.5” SATA TYPE SSD
		2nd Storage	N/A	2.5” SATA TYPE
		ODD	N/A	
	Operating System		Windows 10	IoT 2019 LTSC
	TPM		Support	TPM2.0
	Expansion Slots		1-PCI-Express x16	
	Serial Ports		1 Port	
	USB Ports		14 Ports (3.0 2ea, 2.0 12ea)	
	VGA		On-Board Dual VGA(DVI, RGB)	
	LAN		10/100/1000Mbps On-Board	
	Status Display LED		HDD / PWR LED	

2. Reference Photo

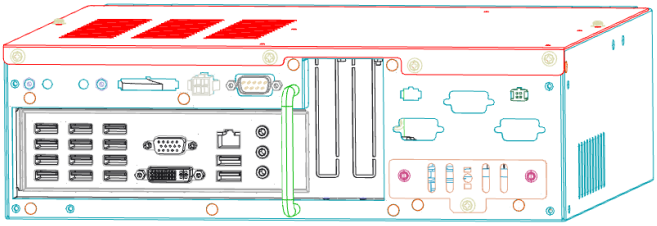

 © 2022 **Hyosung TNS.** All rights reserved.

Description of Product

Customer Display & Keypad

The Customer Display welcomes the customer and provides instructions for performing transactions at the ATM.

During the transaction, the ATM prompts the customer to use the customer keypad to enter transaction information. The 16-key keypad uses an Encryption PIN Pad technology to secure the information entered by the customer at the keypad. The customer touch screen is used with the customer display. The customer selects functions or enters information by touching the screen.

1. Specification

Item			Specification	Remarks (Option)
Customer Display	Display	Type	19” TFT LCD	DVI Interface
		Resolution	1280 X 1024	XVGA
		Brightness	250 cd/m²	
	Input Method		Touch Screen (P-CAP Type)	
	Privacy Filter		Support	
	Guide Light		SPR, MCU, CDU	White
Customer Input Method	Pin-Pad		PC KEY CAP EPP(PCI Compliant)	PCI 5.0
	Function Key		N/A	
	OPL Touch Screen		19” P-CAP Touch	

2. Reference Photo

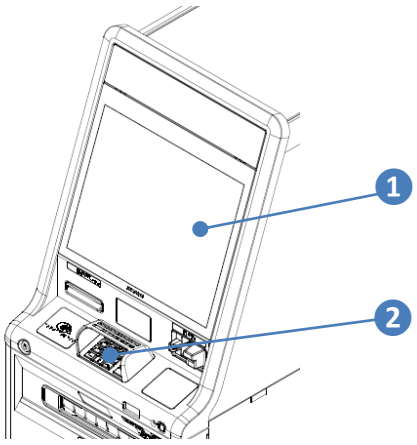

1	Customer Display
2	Pin-Pad (EPP)

 © 2022 **Hyosung TNS.** All rights reserved.

Description of Product

Card Reader

The dip card reader is a manually operated device mounted directly to the ATM fascia. The consumer inserts an ATM card in the card entry slot and then removes the card to begin the transaction. The dip card reader can read magnetic stripe cards and memory chip cards. The dip card reader cannot retract, capture, or retain cards.

1. Specification

Item			Specification	Remarks (Option)
Card Reader (SANKYO)	Type		Dip MCR	USB Interface
	Magnetic Stripe		ISO 1,2,3 Read	
	EMV Level-1,2		Available (IC CARD)	
	Reject Capacity		N/A	Motorized Support
	Card Return		N/A	Motorized Support
	Security	Anti-Skimming	Support	
		Anti-Card-Trapping	N/A	Motorized Support
		Anti-Shimming	N/A	

2. Reference Photo

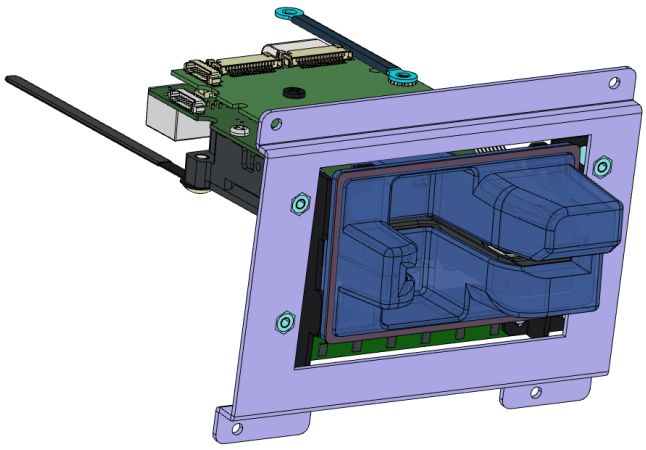

 © 2022 **Hyosung TNS.** All rights reserved.

Description of Product

Receipt Printer (SPR60)

The receipt printer provides a printed receipt of the customer's transaction. The transaction information can include the amount of withdrawals, deposits or transfers, the ATM number and location, and other desired information.

After the customer uses the ATM, a printed record of the transaction information is presented through the appropriate printer entrance.

1. Specification

Item			Specification	Remarks (Option)
Receipt Printer (SPR60)	Printing Type		Thermal Line Printing	
	Printing speed		100mm/sec	
	Printing Width		80mm Max	
	Paper Specification	Type	Thermal Roll Paper	
		Width	Max. 80mm	
		Inner Diameter	18Φ	
		Outer Diameter	Max. 210Φ	
	Paper Roll Capacity		Approx. 5,000 Transactions (114mm/Trans.)	Depends on Format and Paper thickness
	Black Mark Paper Support		N/A	Optional Black Mark Paper

2. Reference Photo

 © 2022 **Hyosung TNS.** All rights reserved.

Description of Product

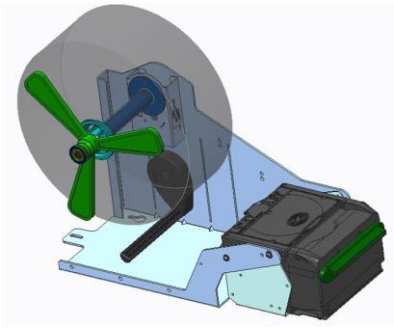

Cash Dispenser Unit (CDU10)

The cash dispenser delivers media (cash) to the customer after the customer's request is processed by the network and the software. The media is drawn from the cassettes and transported to an entrance in the fascia of the ATM, where the customer can receive it. If the media is too mutilated or wrinkled to dispense, or if a multiple pick occurs, the dispenser sends the notes to the reject/retract cassette.

1. Specification

Item		Specification	Remarks (Option)
Cash Dispenser (CDU10)	Shutter type	Automatic Shutter	
	Denomination	CST 1: 20 USD CST 2: 20 USD CST 3: 20 USD CST 4: 20 USD CST 5: 20 USD	
	Maximum Dispense	50 Notes/1 transaction	
	Number of cassettes	5 Cassettes	
	Cassette Capacity	346 mm/1 cassette(about 2,800)	
	Dispensing Speed	6 notes/sec	
	Reject Type	Note by Note Reject (300 bills Max)	

 © 2022 **Hyosung TNS.** All rights reserved.

Description of Product

Item		Specification	Remarks (Option)
	Retract	Bundle Retract (100 bills Max)	
	Number of Near-End Sensing	500 Notes Max	

2. Reference Photo

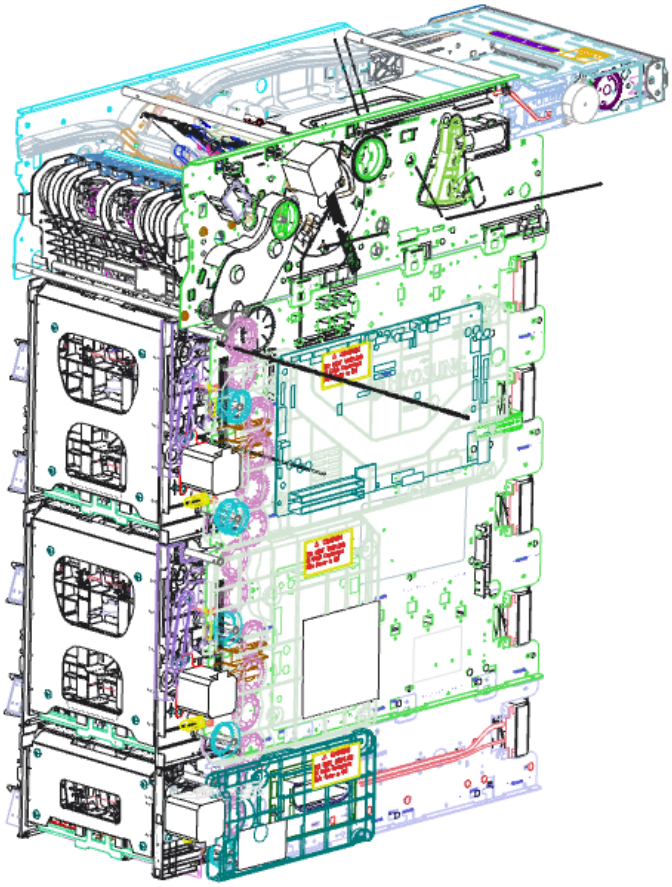

 © 2022 **Hyosung TNS.** All rights reserved.

Description of Product

Power Supply

1. Specification

Item			Specification	Remarks (Option)
Power Supply	Main Power	Input Voltage / Current	AC 100 ~ 240V ±10% / 10.0A	
		Frequency	47 ~ 63 Hz	NORMAL : 50/60Hz
	Battery back-up System		1 Transaction Support	

2. Reference Photo

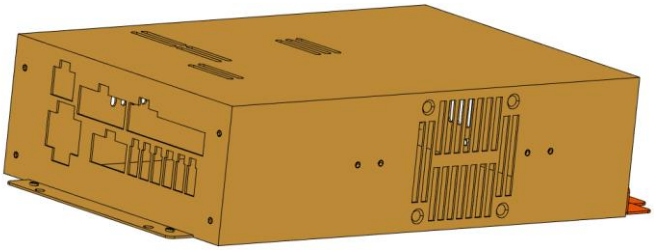

 © 2022 **Hyosung TNS.** All rights reserved.

Description of Product

Barcode Reader

1. Specification

Item	Specification	Remarks (Option)
Barcode Reader	Support	Mindeo ES4650S

2. Reference Photo

 © 2022 **Hyosung TNS.** All rights reserved.

Description of Product

Contactless Card Reader

The RF Reader (contactless card reader) is designed to support contactless transactions. It is composed of a compact controller module and an antenna module.

1. Specification

Item	Specification	Remarks (Option)
RF	Support	Vivopay KioskⅣ

2. Reference Photo

 © 2022 **Hyosung TNS.** All rights reserved.

Operation

Switching Power On/Off

Switching Power On

The power supply unit converts AC power to DC power and provides the voltage to various modules within the system. The power supply unit allows the user to turn on/off the system, enter power-failure mode, and perform other sequences.

The system turning-on process is as follows,

1. Open the upper fascia.
2. Press the power switch (“ON”).
3. The system will turn on automatically.

Switching Power Off

The system turning-off process is as follows

1. Open the upper fascia.
2. Press the power switch (“OFF”) for 1 second.
3. The system will be shut down automatically.
4. The operating system will shut down then power will turn off.

WARNING:

Do NOT operate Main Switch on power supply when you would like to turn off the power.

It may cause damage to operate system or destabilize control electronics in ATM.

 © 2022 **Hyosung TNS.** All rights reserved.

Operation

Power Supply Status

LED and Switch Functions

- [AC IN]: Turned on upon AC power supply.
- [DC OUT]: Turned on upon DC power supply.
- [BATT LOW]: Turned on when the battery voltage is 21V or less or when the battery cable is not connected.
- [MAIN S/W]: Supplies or stops AC power.
- [POWER S/W]: Turns on/off the system.

Switch Status

- [Main S/W] is pressed on “I” position
  AC power is being supplied to the power supply unit, and only [AC IN] LED is turned on.
- [Main S/W] is pressed on “O” position
  AC power is not supplied to the power supply unit and all status LEDs are turned off.
- [POWER S/W] is pressed on “ON” position
  The system is turned on and [AC IN] and [DC OUT] LEDs are turned on.
- [POWER S/W] is pressed “OFF” position
  <System Off> procedure starts, and only [AC IN] LED is turned on.
- In case power failure occurs during normal system operation, the system will enter <Power Failure Mode> and only [DC OUT] will be turned off.

 © 2022 **Hyosung TNS.** All rights reserved.

Operation

Cencon Lock

Security Door with Cencon

The Cencon lock is highly-secured, advanced-design lock. Even though the lock is electromechanical, they require no wiring or batteries for opening the lock because they are self-powered. Power is generated by turning the dial knob on the lock to the left (counter-clockwise). After several turns of the knob, enough power is generated to allow the microprocessor in the lock to function.

Opening and Closing the Security Door

Each Cencon Lock is shipped from the factory in Shelved Mode. The One Time Combination feature which requires a Smart Key is not available when the lock is shelved. Instead, the Shelved Mode combination is used to open the lock without any Smart Key. The default Factory Combination is set to 50-25-50. Practice opening the lock in shelved mode with the default factory combination until you are comfortable with its operation. The default combination may be changed, in which case the new combination would be used to open the lock while in Shelved Mode. The correct opening procedure for a shelved lock in:

1. Turn the dial to the left (CCW), using full wrist turns, until the letters “EC” (Enter Combination) appear on the LCD.

<Note!>

If you are operating a Cencon lock and –dL appears on the display during an operation, it indicates that you should dial Left (Counter Clockwise). The purpose is both to give the lock additional power and to ensure the lock bolt is fully extended.

CW = Clockwise; CCW = Counter Clockwise

 © 2022 **Hyosung TNS.** All rights reserved.

Operation

2. Enter the factory combination of 50-25-50 by sequentially pressing those six buttons. The LCD will display the entered number.

3. When the combination has been correctly entered, the LCD will read “OPr” meaning “Open right.”

4. Turn the dial right (CW) until it stops. The lock’s bolt is now retracted and the lock is open.

5. Turn the handle and open the security door.

 © 2022 **Hyosung TNS.** All rights reserved.

Operation

6. Turn the dial a minimum of one complete rotation to the left (CCW) to extend the bolt.

<Note!>

After opening and closing any lock, you should always check to ensure that the lock is physically relocked (i.e., bolt fully extended and locked in place) by turning the dial to the right. If the bolt does not retract, you can be assured the lock is secured.

Helpful Hint:

At any point while entering the combination during an opening sequence, if you notice that an incorrect number was pressed on the keypad, you may clear the entire operation and start again by pressing the star (*) key. This allows you to return to the EC prompt without getting a wrong try error (lightning bolt).

Caution - Lock Out (LCO):

When the combination is incorrectly entered, a lightning bolt error will flash on the display (with no other numbers following it). To clear this error and start again, press and hold the star (*) key. Even in Shelved Mode, it is important to avoid getting 5 wrong combination attempts in a row without a successful opening in between because the lock will be put into Lock-Out condition, displaying, "LCO." Clearing the LCO condition in Shelved Mode requires waiting 5 minutes and then entering the correct combination.

 © 2022 **Hyosung TNS.** All rights reserved.

Operation

Changing Shelved Mode Combination

For Cencon Locks with a code level of 71[1], or greater, you may change the Shelved Mode combination. You may change the default Factory Combination of 50-25-50 to a new combination to be used while the lock is still in Shelved Mode. Once you have changed the combination for the first time, you may want to change the combination again to a different Shelved Mode combination. You can even change it back to the Factory combination of 50-25-50.

This is an option that is only available while the lock is in Shelved Mode and is intended only for temporary use after the ATM is deployed but before the lock is activated. It is not recommended to keep the Cencon lock in this Shelved Mode condition, due to lack of security and control.

Required Items:

Change Key, Current Shelved Mode Combination

<Note!>

You can only change the Shelved Mode combination while operating in Shelved Mode. Once a lock is "activated" in any mode, the Shelved Mode combination returns to the Factory Default of 50-25-50

[1] It is sometimes necessary to determine the level of the Cencon Lock with which you are working. This can be done by entering a command via the keypad. The lock level will then be displayed on the LCD. Use the following procedure:
1) Power the lock by turning the dial to the left (counter clockwise) until EC is displayed.
2) Enter the # 1 keypad command. Then the lock displays a string of characters on the LCD, displaying two characters at a time. The best thing to do in analyzing the lock level is to write down the entire string and then pick out the portions of it that are significant to you, or if you are experiencing a problem with the lock, report the entire string to the Tech Support group.

 © 2022 **Hyosung TNS.** All rights reserved.

Operation

To change the Shelved Mode Combination

1. Power Lock → EC

   Turn the Dial to the left (CCW) until “EC” (Enter Combination) is displayed.

2. EC → Enter Shelved Mode Combination → OPr

   Enter the current Shelved Mode combination (either 50-25-50 or a changed Shelved Mode combination) by sequentially pressing those digits on the lock keypad. The numbers will be displayed on the LCD as they are entered. When the combination has been correctly entered, the LCD will read OPr, meaning "OPen right."

3. OPr → Retract Bolt

   Turn the Dial to the right (CW) to retract the bolt

4. Open Door

5. Insert Change Key

   Insert the change key into the change key socket on the back of the lock.

   <WARNING>

   Do not close the door.

   Leave the door open during this process until you are comfortable opening the lock with the new combination.

 © 2022 **Hyosung TNS.** All rights reserved.

Operation

6. Extend Bolt

Turn the Dial to the left (CCW) to extend the bolt.

7. Power Lock → 

Turn the dial to the left (CCW) until  (the Change Key symbol along with Enter Combination) is displayed.

8.  → Press #8 → EcF

Press the “#” button followed by the “8” button. EcF (Enter current Factory combination) will be displayed

9. EcF → Enter Current Shelved Mode Combination → EnF

Enter the current shelved mode combination, “EnF” (Enter new Factory combination) will be displayed.

10. EnF → Enter New Combination → Cnf

Select and enter the new combination. “CnF” (confirm new Factory combination) will be displayed

11. Cnf → Enter New Combination → POC

Enter new combination again to confirm. POC (Pull Out Change key) will be displayed.

 © 2022 **Hyosung TNS.** All rights reserved.

Operation

WARNING:

Record the new combination and store it in a secure place. If this combination is lost or forgotten, there is no alternate way to open the lock.

12. POC → Remove Change Key → EOP

    Remove the change key. EOP (End Operation) is displayed.

13. EOP → Power Lock → EC

    Turn the dial to the left (CCW) until EC (Enter Combination) is displayed.

14. EC → Enter New Shelved Mode Combination → OPr

    Enter the new shelved mode combination by pressing those digits on the lock's keypad. The numbers will be displayed on the LCD as they are entered. When the combination has been correctly entered, the LCD will read OPr, meaning "OPen right."

15. OPr → Retract Bolt

    Turn the Dial to the right (CW) to retract the bolt.

16. Close Door

17. Extend Bolt

    Turn the Dial to the left (CCW) to extend the bolt.

 © 2022 **Hyosung TNS.** All rights reserved.

Operation

Receipt Printer (SPR60)

Introduction

Information in this section is subject to change without notice. Hyosung TNS reserves the right to improve products as new technology, components, software, and hardware become available. If users need further data about these products, please feel free to contact Hyosung TNS or your local dealer.

No part of this document may be reproduced or transmitted in any form or by any means for any purpose without the express written permission of Hyosung TNS.

Warning and caution:

Caution: Items shall be strictly followed to avoid injury or damage to body and equipment.

Note: Items with important information and prompts for operating the printer.

Heating: Thermal elements. No touching.

Warning: Do not touch equipment to avoid damaging it for static electricity.

Safety instructions

Before installing and using the printer, please read the following items carefully:

1. Install the printer on a flat and stable surface;
2. Reserve adequate space around the printer so that convenient operation and maintenance can be performed;
3. Keep the printer far away from water source, and do not expose the printer to direct sunlight, strong light and heat;
4. Do not use or store the printer in a place exposed to high temperature, high humidity or serious pollution;
5. Do not place the printer in a place exposed to vibration or impact;
6. No condensation is allowed to the printer. In case of such condensation, do not turn on the power until it has completely gone away;

 © 2022 **Hyosung TNS.** All rights reserved.

Operation

7. Connect the printer power to an appropriate grounding outlet. Avoid sharing one electrical outlet with large power motors or other devices that may cause the fluctuation of voltage;
8. Disconnect the power when the printer is deemed to idle for a long time;
9. Don't spill water or other electric materials into the printer (e.g. metal). In case this happens, turn off the power immediately;
10. Do not allow the printer to start printing when there is no recording paper installed; otherwise the print head and platen roller will be damaged;
11. To ensure quality print and normal lifetime, use recommended paper or its equivalent;
12. Shut down the printer when connecting or disconnecting interfaces to avoid damages to control board;
13. Set the print darkness to a lower grade as long as the print quality is acceptable. This will help to keep the print head durable;
14. Do not disassemble the printer without permission of a technician, even for repairing purpose;
15. Keep this manual safe and at hand for reference purpose.

Summary

The printer is a high performance thermal printer equipped with cutter and presenter, it can accept up to 220mm paper roll and the widest print width is 80mm. It can be widely used in various fields like finance, retail, lottery, etc.

THE PRINTER consists of the following modules:

● Thermal printing unit

● Presenter

● Paper holder

● Control board

● Cutter

SPR60 can be connected with other device by USB interface or serial interface.

Main features

● Printing

- High-speed

 © 2022 **Hyosung TNS.** All rights reserved.

Operation

- Low-noise thermal printing
- High reliability

● Presenter

- Paper holding
- Paper retraction
- Paper ejection

⚠Note: The Presenter is a paper accommodation mechanism and locates at the front end of the printer.

● Special Function:

- Anti-jam
- Anti-pull

● Applications

- Instruction set compatible with HYOSUNG's LSPR3 EP standard for SPR60 with USB communication interface;
- Instruction set compatible with HYOSUNG's KSPR1-VEP standard for SPR60 with serial communication interface;
- Characters handling: Supports ASCII code for SPR60 with serial communication interface;

● Printer Maintenance

- Replace paper roll easily;
- The top cover of printer can be opened, which is convenient for maintenance;
- The top cover of Presenter module can be opened, which is convenient for maintenance;
- Paper width can be adjusted linearly, paper width stopper can be locked;
- Characteristics and parameters can be set by software;
- Single USB interface or single serial interface is optional;
- Mark identification and checkout;
- Lower mark sensor for non-thermal side is adjustable;

 © 2022 **Hyosung TNS.** All rights reserved.

Operation

- Semi-auto paper loading;

- Firmware can be updated on-line.

Paper Specification

Paper type	Continuous /marked paper
Paper supply method	Paper roll
Paper width	80mm
Paper weight	55g ~ 100g
Thermal layer	Outward/Inward
Paper roll specification	Optional ID of paper roll core: ϕ18 Minimum ID of paper roll: ϕ24 Maximum OD of paper roll: ϕ220mm

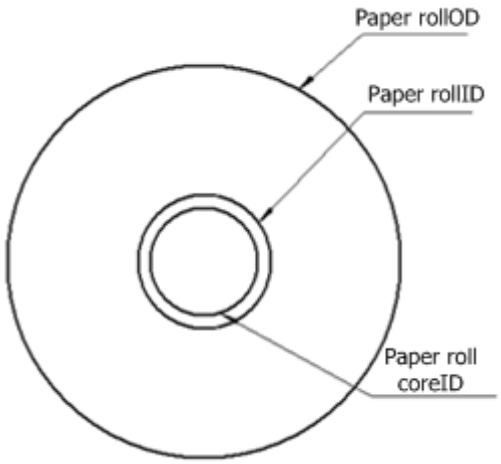

<Paper roll diagram>

<Note!> The supported paper thickness and paper roll diameter is as followings when there is Presenter module:

Paper thickness	Min paper roll ID	Remarks
55-80 um	Φ24	
80-100 um	Φ31	

 © 2022 **Hyosung TNS.** All rights reserved.

Operation

Recommended Paper:

1. Recommended continuous paper:

Paper type	Manufacturer
FD200	OJI Paper CO., LTD.
FD210	OJI Paper CO., LTD.
ADP78	OJI Paper CO., LTD.
PD150R	OJI Paper CO., LTD.

<Recommended paper>

2. Recommended marked paper:

The marked paper should meet the following requirement besides that of standard paper:

● Mark position

- There are three positions for mounting the mark sensor on the thermal side, and the left and the right positions can be adjusted along with the paper guide block while the middle position is fixed. The position for mounting the mark sensor on the non-thermal side is continuously adjustable. The above mark sensor has requirements for the mark position, referring to the figure below;
- In using marks, it is recommended to use the following parameter:
  L1 mark width: 8mm≤L1≤paper width
  L2 mark width: 4mm≤L2≤8mm
- The reflectivity of marks is less than 15%; The reflectivity of other part of the ticket within mark width along paper feed direction is over 75%. There should not be any characters, graphics as advertisement between marks space.

 © 2022 **Hyosung TNS.** All rights reserved.

Operation

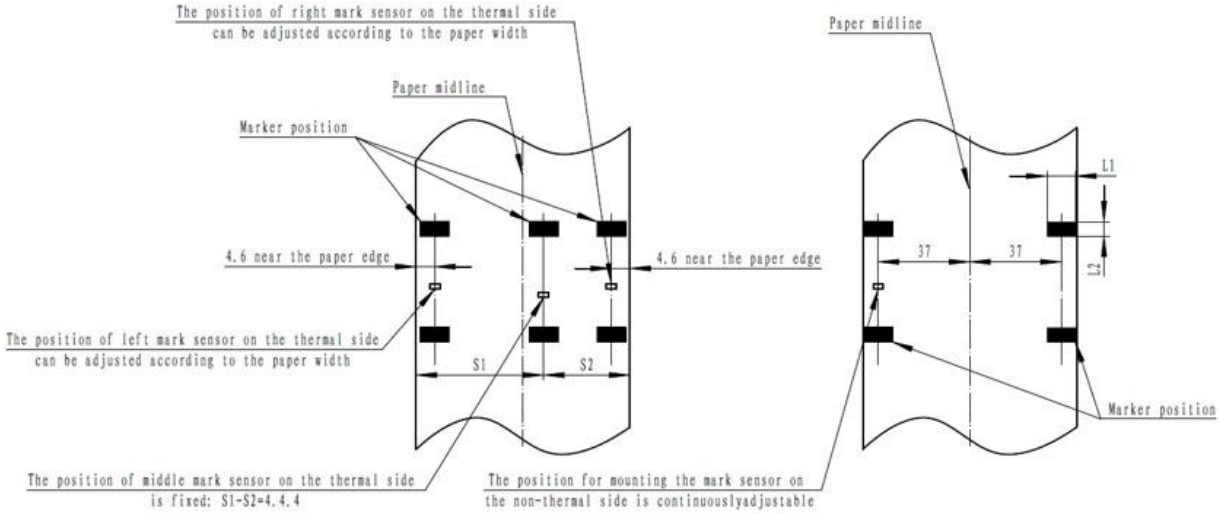

<Mark position diagram>

⚠Notice:

Due to the dithering during paper feeding and tolerance of paper parameters, the mark positioning position may have a tolerance of ± 1mm.

Only one mark sensor is mounted on the non-thermal side when the printer is delivered from the factory (default position is on the non-thermal side of paper path) and the mark sensor position is continuously adjustable.

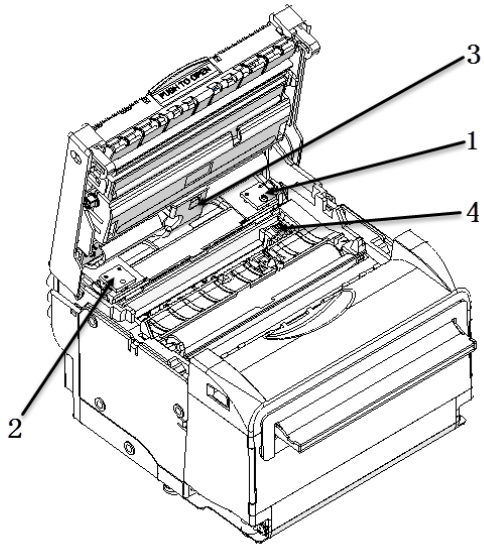

<Mark sensor>

 © 2022 **Hyosung TNS.** All rights reserved.

Operation

1	Right mark sensor on the thermal side
2	Left mark sensor on the thermal side
3	Middle mark sensor on the thermal side
4	Mark sensor on the non-thermal side

⚠Notice:

1. The mark sensor on non-thermal side is the default sensor when delivery from the factory, and the middle mark sensor on thermal side is used as paper feeding sensor;
2. The middle mark sensor on thermal side is optional, while only one of the other three sensors can be installed.

⚠Notice:

1. Please use the recommended paper or its equivalents. Using other types of paper may affect print quality and reduce the print head lifetime;
2. Do not paste the paper to the shaft core;
3. If the paper comes in contact with chemical or oil, it may discolor or be less heat sensitive, which will greatly affect the print quality;
4. Do not rub the paper surface with a nail or hard metal. Otherwise it may discolor;
5. When the temperature goes up to 70°C, paper will discolor. So please be careful to the effect of temperature, humidity and sunlight in environment.

 © 2022 **Hyosung TNS.** All rights reserved.

Operation

Structure and functions

Appearance

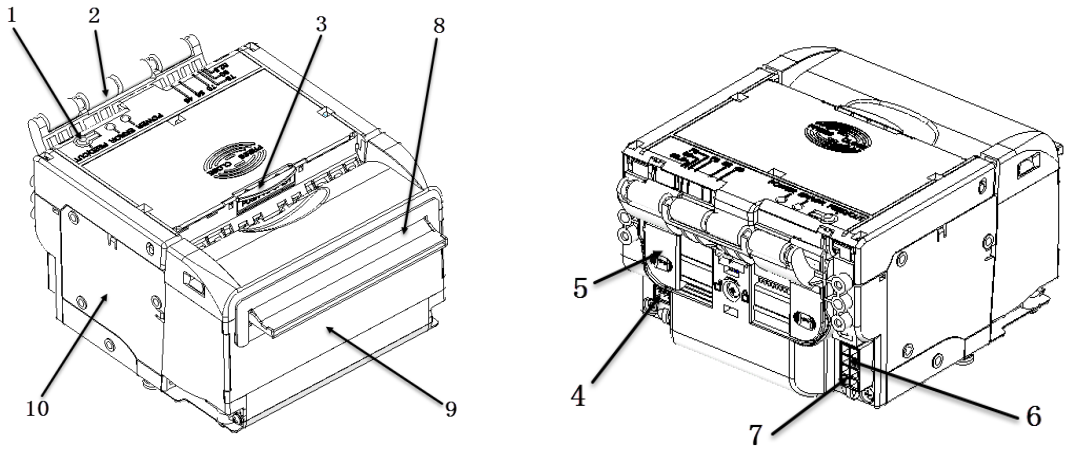

<SPR60 printer appearance>

1	Button	6	Communication interface (USB or serial interface is optional)
2	Buffer module (optional)	7	Power interface
3	Button for opening and closing the top cover	8	Paper exit
4	Paper near sensor socket	9	Presenter
5	Paper guide block	10	Print module

 © 2022 **Hyosung TNS.** All rights reserved.

Operation

Print unit and controlling parts

The controlling parts include circuit board and corresponding adjustment buttons and interfaces.

1. Exterior of print unit and controlling parts

The print unit consists of print mechanism and cut mechanism, referring to the figure below:

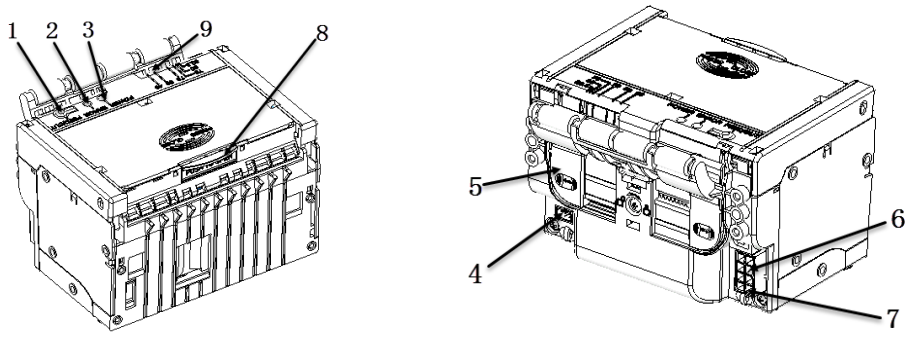

<Print unit and controlling parts>

1	Feed/Cut button	2	Error LED
3	Power LED	4	Paper near sensor socket
5	Paper guide block	6	Communication interface (USB or serial interface is optional)
7	Power interface	8	Button for opening and closing the top cover
9	Paper entry		

Note: The power cord connected with power interface 7 has power.

2. Modules of print unit

● Feed/Cut button

- Print self-test page: keep pressing the FEED button while turning on the power for 1s, the printer will print the self-test page;
- Feed paper: under normal conditions, press the FEED / CUT button, the printer will feed paper, and the printer will stop feeding paper when release the FEED / CUT button. During paper feeding, the Presenter will start when the paper head enters the Presenter, and the Presenter will stop running when the paper head is held by the Presenter;

 © 2022 **Hyosung TNS.** All rights reserved.

Operation

- Cut paper: the printer will cut paper if press the FEED / CUT button for two times continuously.

⚠Notice:

The printer will not run when press the FEED button under error status.

● Button for opening and closing the top cover

After pressing the button for opening and closing the top cover, the top cover module can be opened for maintenance work, such as clear jammed paper jam, clean the print head/platen rollers.

● Power switch

Press “O” to turn off the power, or press “—”to turn on the power.

● Error LED (Red)

Indicate different status of printer. Normally, it is off; under error status (like paper end), it will flash.

Note: Error LED also flashes when the printer executes macro definition.

● Power LED (Green)

Indicate whether the power is on or not and it is always on when the printer is turned on.

⚠Heating:

The print head and the motor gives out heat while using, please do not touch it just after operation.

 © 2022 **Hyosung TNS.** All rights reserved.

Operation

Presenter

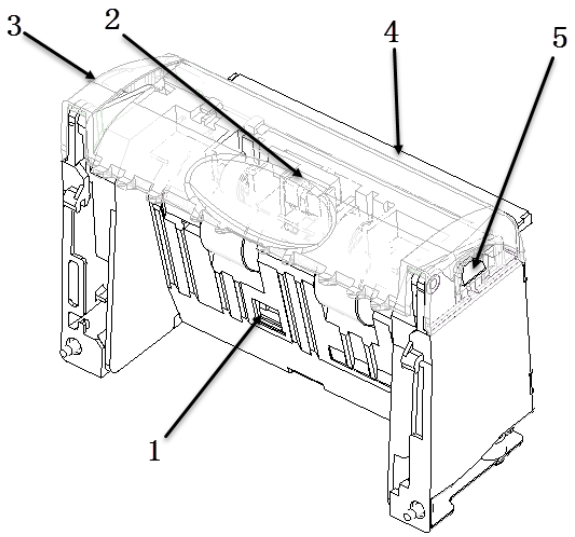

<Appearance of Presenter>

1. Paper retraction sensor: Check whether the paper is retracted correctly during the process of paper retraction.
2. Paper out sensor: Detect the status of print paper and confirm whether the print paper has been taken away or not.
3. Presenter top cover: After pressing the snap-fit, the cover can be opened for clearing Presenter jammed paper.
4. Paper outlet mouth.
5. Snap-fit for fixing the top cover.

Install and load the paper roll

Before installing the paper roll, make sure the specification of paper roll is in conformity with requirements of printer.

Install load the paper roll

The paper roll is easy to be installed on SPR60, and the steps are as following:
Turn on the power, and then place the paper head in the paper feeding path as shown in the figure below:

 © 2022 **Hyosung TNS.** All rights reserved.

Operation

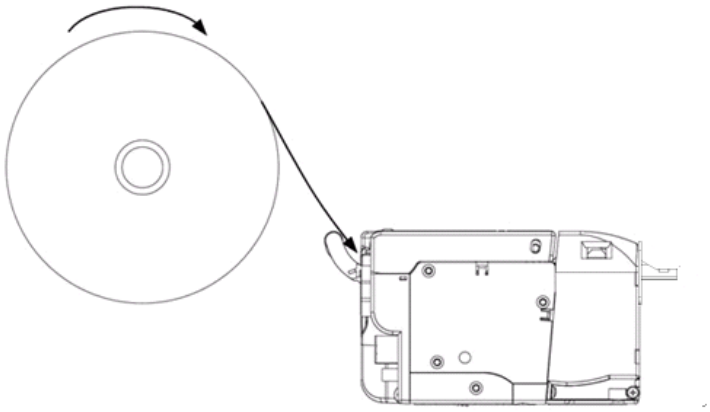

<Paper loading>

When the paper sensor detects paper, the platen rollers will start rotation to complete the semi-automatic paper loading.

⚠Caution:

Before loading paper, cut the paper head trim according to the figure below:

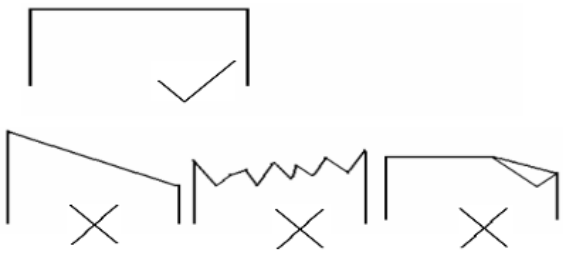

<Paper head>

Before loading paper, make the paper flat to ensure the paper be fed smoothly into the path.

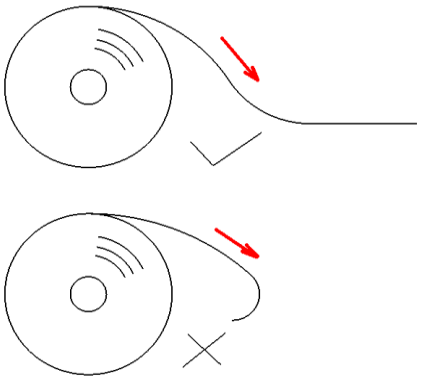

<Radian of paper head>

 © 2022 **Hyosung TNS.** All rights reserved.

Operation

Semi-automatic paper loading

1. Turn on the power and the ERROR LED alarms for paper end;
2. Refer to the figure below, push paper into the paper inlet for a certain distance, and release your hands when the platen roller starts rotating and holds the paper.
3. The printer starts loading paper, and then the printer can execute print tasks after finishing loading the paper and the paper head stops at the normal print position.

⚠Caution:

Push the paper into the paper feeding path with well-distributed and gentle force and try to make the paper head parallel to the paper feeding path. If the angle between paper center line and the printer center line is≤4°, it can guarantee that the paper jamming malfunction will not happen.

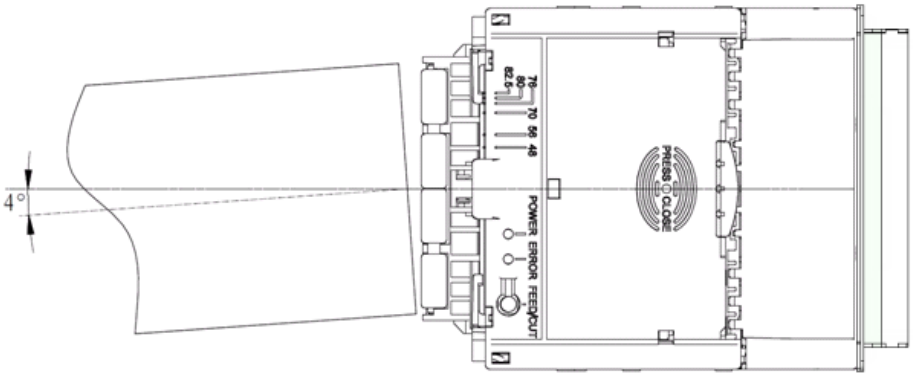

<Paper loading>

Clear the jammed paper in the cutter

When any of the following cases occurs, please remove jammed paper manually.

1. Paper jams between platen roller and cutter holder.
2. Paper accumulates at paper inlet of the cutter in the front of print head.
3. The cutter can’t cut off paper.

Remove the jammed paper manually in the following steps:

1. Turn off the printer power;
2. Press the spanner slightly with hand as shown in the following figure to open the top cover;

 © 2022 **Hyosung TNS.** All rights reserved.

Operation

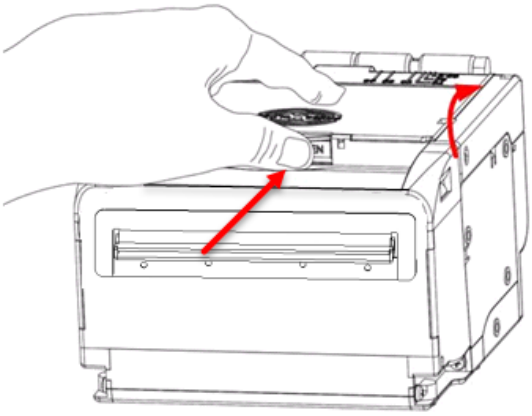

3. Check whether there is wastepaper under the cutter blade and print head. If so, please take it out;

4. When confirming there is no wastepaper, close the top cover;

⚠Caution:

Turn off the power before removing the jammed paper.

Clear the jammed paper in the presenter

When any of the following cases occurs, please remove the paper manually:

Paper is jammed into the path of Presenter;

Paper does not enter the paper output path of presenter.

Remove the jammed paper manually in the following steps:

1. Press the snap-fit on Pre upper path as shown in the following figure and apply force upwardly to remove the Presenter top cover;

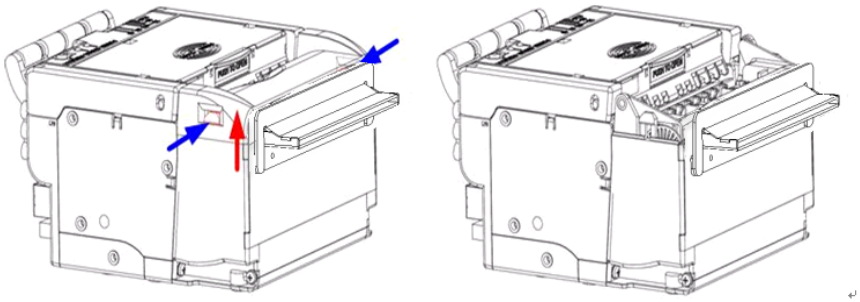

<Clean the jammed paper in the Presenter>

2. Take out the jammed paper and install the Pre top cover to the printer.

 © 2022 **Hyosung TNS.** All rights reserved.

Operation

Troubleshooting and maintenance

If errors occur in the printer, consult the troubleshooting table below. If still can't settle the trouble, please contact with Hyosung TNS or the distributor.

Error and settlement

1. Error index

Errors	Description	Error LED
Print head overheating	Temperature of the print head is too high.	
Abnormal voltage	Input voltage is too low or too high.	
Cutter error/paper jam	Cutter can't work normally or Paper jams.	
Print head uplifting	Print head is uplifted.	
Paper end	Paper sensor detects paper end.	
Calibration failure	Marked paper calibration error.	
Paper near end	Paper sensor detects paper near end.	
Macro definition execution status	In the execution of a macro definition.	
Normal stand-by status		

<Note!>

In the default configuration, the printer will not stop printing when paper end, and the user could change the default configuration as stop printing when paper end via KIOSK Utility software, and under the new configuration, the error LED will flash and indicate paper end;

Printer executes the following activities when errors occur:

- Stop printing;
- Busy signal is available;
- Error LED flashes;

 © 2022 **Hyosung TNS.** All rights reserved.

Operation

Solution for common errors

1. Problems during paper loading

Problem	Possible reasons	Solutions
Paper roll can’t be loaded onto paper holder smoothly	The paper roll ID does not match the printer	Replace paper roll.
The printer can’t feed paper automatically	Paper head is irregular; Paper jams; The paper loading sensor is not covered by paper head; Dust and wastepaper covers the paper loading sensor.	Trim the paper head according to requirements; Remove jammed paper; Check the paper head to confirm that the paper loading sensor is covered fully by paper; Clean the paper loading sensor.
After automatic paper feeding, the paper can’t stop in the normal print position	Dust or wastepaper covers the paper loading sensor.	Clean the paper loading sensor.

<Errors during paper loading>

2. Problems during printing

Problems	Possible reasons	Solutions
The receipt can’t be ejected out smoothly.	Paper jams.	Check paper feeding path, remove wastepaper and reload paper.
Printout is not clear.	The paper is loaded in wrong direction or its quality is poor; Print head needs cleaning; The print darkness is too low; Input voltage is too low.	Load the paper roll correctly; Use recommended paper or its equivalents; Clean the print head; Adjust print darkness (*); Use the power supply which meets requirements.
Cutter works abnormally.	Paper jams in cutter; The cutter is broken.	Check if there are sundries in cutter path(*), contact with Hyosung TNS or your local distributor.
Printing data is lost and no printing.	The platen roller is not closed; Paper jams.	Close the platen roller properly; Remove jammed paper.

<Problems during printing>

 © 2022 **Hyosung TNS.** All rights reserved.

Operation

To adjust print darkness, contact with our distributors or Hyosung TNS.
If paper jams in cutter, please remove the jammed paper firstly, and then press CUT button to reset the cutter.

3. Problems during paper output

Problems	Possible reasons	Solutions
The printer stops printing and warns errors during printing.	Paper end; Paper jams in cutter; Dust or wastepaper covers the paper near end sensor.	Install a new paper roll; Check if there are sundries in cutter path; Clean the paper near end sensor.

<Problems during paper output>

<Note!> Contaminated paper may cause detection failure.

4. Other problems

Problem	Possible reasons	Solutions
LED does not light and printer does not work.	The printer is not connected with the power correctly. The printer isn't turned on.	Connect the printer with power correctly. Turn on the printer.
The printer does not work after receiving commands.	Printer is in error status. The communication cable is not connected well. Interface setting is wrong.	Remove the errors(*) Make sure the communication cable is connected correctly. Set the interface again according to the self-test page.

<Other problems>

<Note!> Paper near end alarm acts only as a prompt for users, not an error status. Therefore, when this alarm is given, printing task can still be sent.

 © 2022 **Hyosung TNS.** All rights reserved.

Operation

Self-test page

Print self-test page in the following steps: Turn off printer power, then keep pressing the FEED button for at least 1 second while turning on the printer. The printer will start to print a self-test page. (Take 203DPI/USB interface model for an example, and the self-test page is shown as follows).

*****SPR60 TEST FORM*****

Boot Firmware :FV1.041
Main Firmware :FV1.075

H/W parameters
Flash Memory Size :4M Bytes
Flash Logos/Fonts :128K Bytes
Resolution :203×203DPI
Print Width（Max） :80mm
Fixed LeftMargin :5mm
Fixed RightMargin :3mm
PrintSpeed（Max） :150mm/s
Dark Scale :110
Cutter :Enabled
Presenter :Enabled
Presenter Action Mode :Hold Waiting Mode
CRComand:Enabled
Current Code Pages :PC437

Communication Interface
Interface Type :USB_SPR60(U)1
Interface Mode :API Mode
Rx Buffer Size :4K Bytes

Resident Fonts
Font0 (12X24) :English
Font1 (9X17) :English
Font3(24X24) :GB18030
Code Pages
:PC437,PC850
:PC852,PC858
:PC860,PC863

 © 2022 **Hyosung TNS.** All rights reserved.

Operation

:PC865,PC866
:1252,Katakana
:More in
Feed button
Configuration
...

International Character
:U.S.A.
:France
:German
:U.K.
:Denmart I
:Sweden
:Italy
:Spain
:Japan
:Norway
:Denmark II
:Spain II
:Latin America

Bar Code Available :UPC-A
:UPC-E
:EAN-8
:EAN-13
:CODE39
:CODE93
:ITF
:CODABAR
:CODE128
:PDF417
:GS1
:QRCODE
:MAXICODE

STATISTICS:
Printed paper lengt:xxxxxxxx
Printed lines(Total) :xxxxxxxx
Printed lines(Actual) :xxxxxxxx
Number of Cuts(Toatal) :xxxxxxxx
Number of Cuts(Actual) :xxxxxxxx

Power On time :xxxxxxxx
Product date :xxxxxxxx
Note: xxxxxxxx represents the detailed contents or value of print item.

 © 2022 **Hyosung TNS.** All rights reserved.

Operation

Explanation of self-test page:

Boot Firmware----------Printer BOOTLOADER version
Main Firmware----------Printer monitor program version
H/W parameters----------Printer parameter setting
Flash Memory Size----------Printer FLASH capability
Flash Logos/Fonts----------Flash size for bitmap downloading
Resolution----------Printer resolution
Fixed Left Margin----------Printer fixed left margin
Fixed Right Margin----------Printer fixed right margin
Print Width(Max)----------Maximum printable width
Dark Scale----------Print darkness
Print Speed(Max)----------Print speed
Cutter----------Enable or disable cutter
Presenter----------Enable or disable Presenter
Presenter Mode----------Pre paper output mode
Presenter Wait Time---------Pre waiting time before retracting or ejecting paper
Communication Interface---Communication interface setting
Rx Buffer Size----------Data receiving buffer area size
Interface Type----------Interface type
Resident Fonts----------Font setting
Bar Code Available----------Printable barcode type
STATISTICS:----------Statistic data of the printer
Printed paper length---------Total paper feeding length of printer
Printed lines(Total)----------Total printed lines of printer
Printed lines(Actual)---------Current printed lines of printer
Number of Cuts(Total)------Total cut times of printer
Number of Cuts(Actual)-----Current cut times of printer
Note: The content of self-test page changes according to different printer configurations.

 © 2022 **Hyosung TNS.** All rights reserved.

Operation

Cash Dispenser (CDU10)

Bill Conditions

Acceptable condition

1. Bill which is very clean and can readily be recognized as a true bill

2. Bill has sufficient life or sizing to be handled easily

3. Bill which can be manually held straightly when one end is held by a hand and the bill is slightly curved vertically.

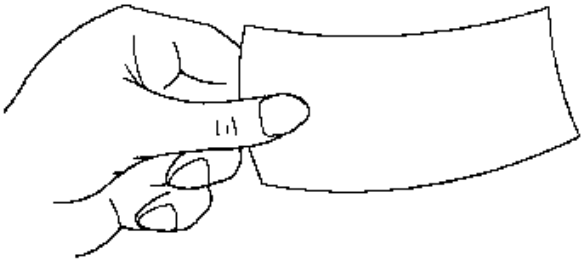

 © 2022 **Hyosung TNS.** All rights reserved.

Operation

Unacceptable condition

1. Bill with serious wrinkles, torn or broken section wherein paper fiber is broken and separation begins.

▪ Wrinkle

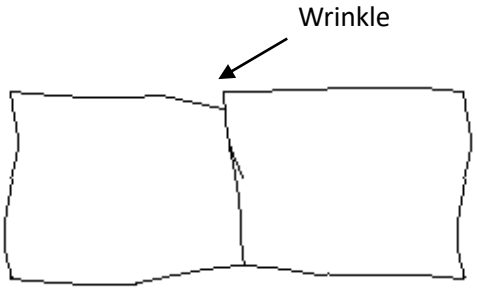

▪ Torn

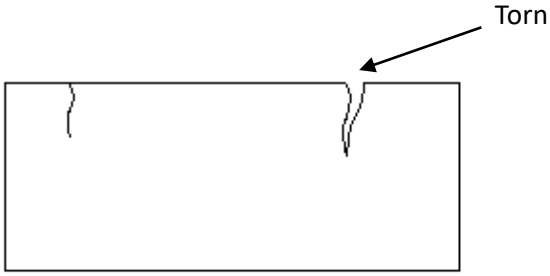

▪ Broken section

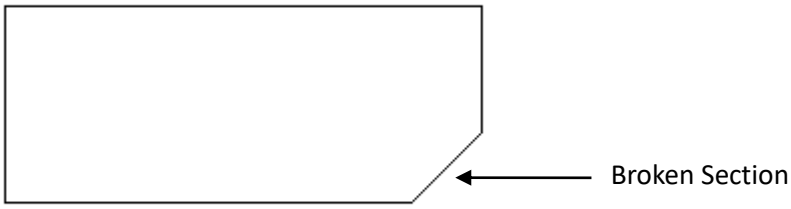

 © 2022 **Hyosung TNS.** All rights reserved.

Operation

2. Bill having adequate life or sizing, but stained seriously

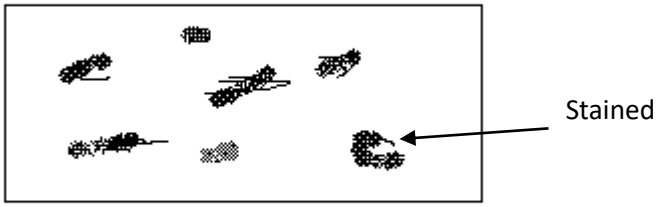

3. Bill with holes (Perforated bill)

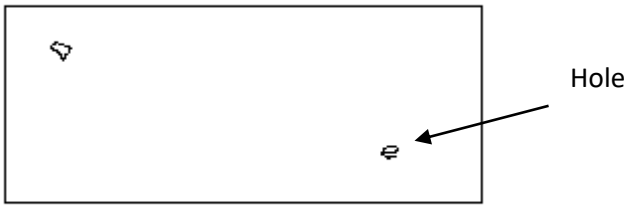

4. Bill ragged and cannot be held straightly when one end is supported by a hand

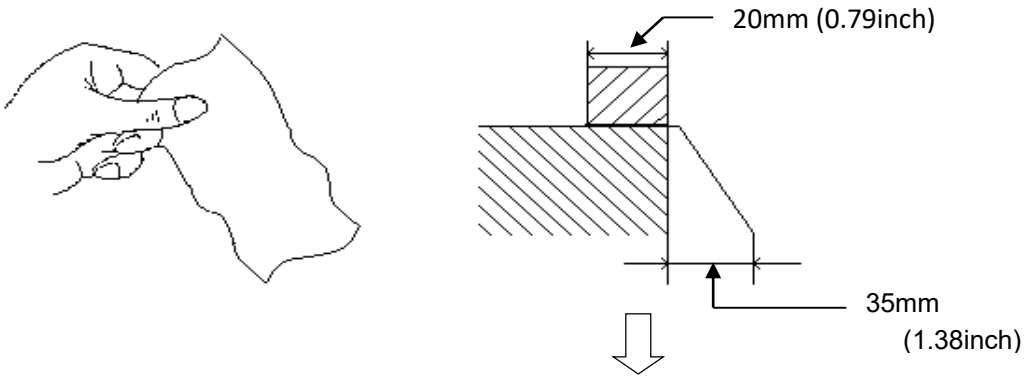

When the bill is held by 20mm (0.79inch) and the straightness of the bill is 35mm (1.38inch) or less, it cannot be used

 © 2022 **Hyosung TNS.** All rights reserved.

Operation

5. Bill with cellophane tape, scotch tape, etc.

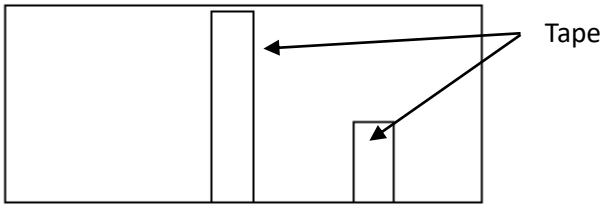

6. Bill with folds

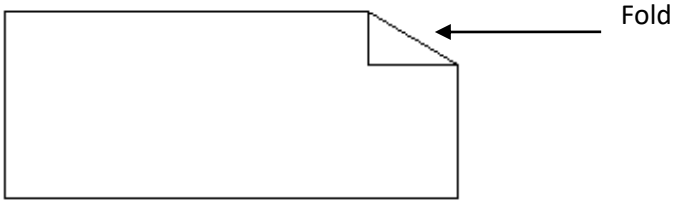

7. Gradually curved bill (bills tied by hand seal, etc.)

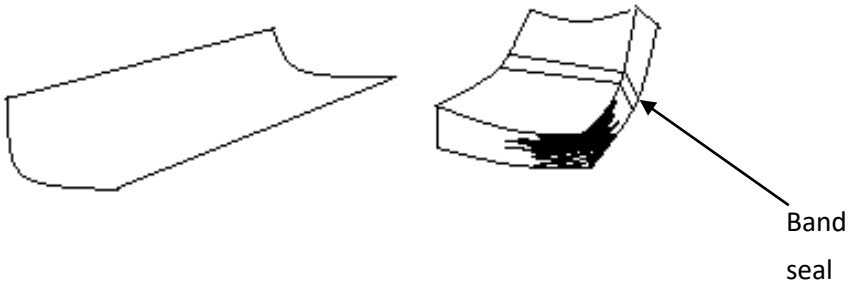

 © 2022 **Hyosung TNS.** All rights reserved.

Operation

8. Bill with folded lines

Case 1

Case 2

Case 3

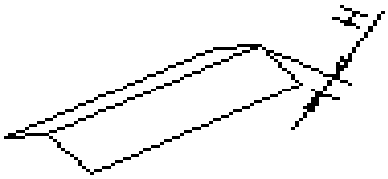

<Note!>

Bill distortion should not exceed 10 mm (0.39inch).

 © 2022 **Hyosung TNS.** All rights reserved.

Operation

How to Replenish the Cash Cassette

1. Push the lever A and holding a cassette handle B with the other hand pull out slightly, and support the cash cassette from bottom with the hand pushed the lever A, and pull out to the end of the cassette.

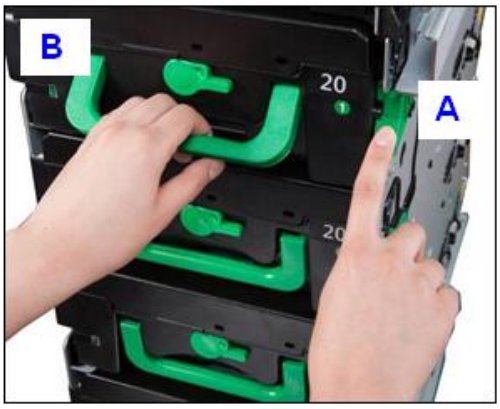

2. Place the cash cassette on a flat level platform and turn the green lever clockwise to unlock a cassette cover. Then lift up the cassette cover.

<Note!>

1) Completely open the cassette cover as picture below when replenishing a cash cassette.

 © 2022 **Hyosung TNS.** All rights reserved.

Operation

2) If you have the key type cassette, open the cassette cover using the key like the picture below.

3. Pull black push-plate back completely until it is locked against the cash plate latch.
4. Pull the Push-Plate after pressing the Green Color Button (**C**).

5. Set the bills and push the Push-Plate to the location where the bills are set.

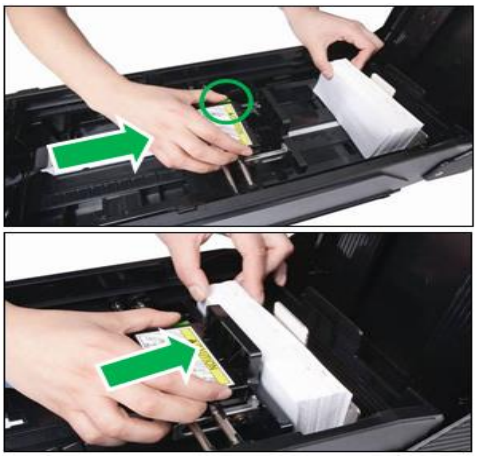

 © 2022 **Hyosung TNS.** All rights reserved.

Operation

CAUTION:

Be sure to keep in mind the followings prior to replenishing the cash cassette with the bills,

1) Fan the bills so that the bills are not sticking together.

2) Remove all bills with holes or bills that are torn.

3) Unfold the folded bills.

4) Place the bills correctly.

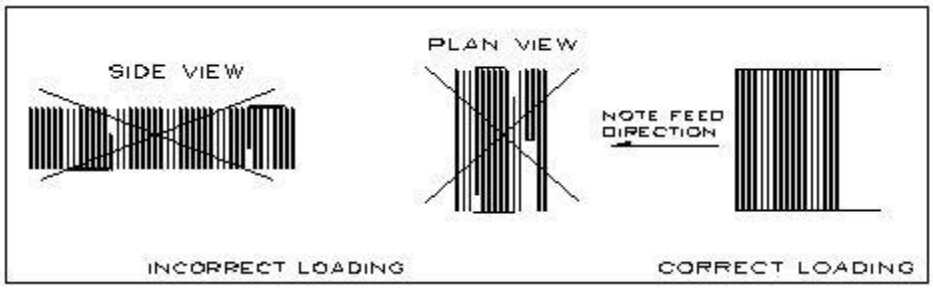

6. Turn the green lever clockwise and completely close the cassette cover.

<Note!>

1) If you have the key type cassette, close the cassette cover using the key like the picture below.

 © 2022 **Hyosung TNS.** All rights reserved.

Operation

7. Holding a cassette handle with one hand and supporting the cassette from the bottom with the other hand, place the cassette carefully on the set guide of the CDU and push it completely until it is locked in place.

 © 2022 **Hyosung TNS.** All rights reserved.

Operation

How to Empty the Reject/Retract Box

Reject & Retract Box is an integral system that transfers defective bills from cash cassette to Reject Compartment while sending the bills withdrawn but not taken by customers to the Retract Compartment where the bills can be safely stored.

All bills in the retract area of the box can be reused and bills found in the reject area may not be reused. Any bills rejected will be rejected again and it may cause a major bill jam taking the CDU down.

<Note!>
After all jams have been removed it is imperative that you test the complete unit via diagnostics.

1. Push the lever (**A**) and holding a Reject/Retract Box handle (**B**) with the other hand pull out slightly, and support the Reject/Retract Box from bottom with the hand pushed the lever (**A**), and pull out to the end of the cassette.

 © 2022 **Hyosung TNS.** All rights reserved.

Operation

2. Turn the green lever clockwise and open the box lid.

<Note!> If you have the key type Reject/Retract box, open it using the key like the picture below.

3. Remove both rejected and retracted bills from the box. Push the edge of transparent component when remove retracted bills.

 © 2022 **Hyosung TNS.** All rights reserved.

Operation

PRE CAUTION:

Don’t recycle rejected bills any more. Doing so will cause not only the same reject problem but other unexpected problems such as jams on cash dispenser.

4. Use the reverse order of 1)~3) to put Reject/Retract Box together into cash dispenser again.
   The Reject/Retract Box must be fully inserted. Otherwise, it will happen problems and the error code will display at monitor promptly.

 © 2022 **Hyosung TNS.** All rights reserved.

Operation

How to Clear Jamming in cash dispenser

1. Turn ATM power off, this will initiate an ATM stop process and shut down process, when SHUTDOWN is displayed you may release the switch, wait until machine shuts down completely to clear jams.

   <Note!>
   Any branch personnel should not attempt to remove any jams without first powering down the ATM.

2. Undock the CDU and slide out completely. Then perform the following steps for each case to clear the obstruction.

 © 2022 **Hyosung TNS.** All rights reserved.

Operation

Remove jam from the upper horizontal transport path

Remove jam from the upper horizontal transport path

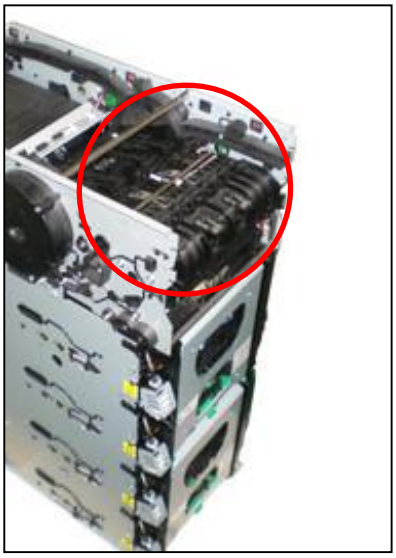

1. Pull the lever with both hands while pressing it inward and then remove the bill.

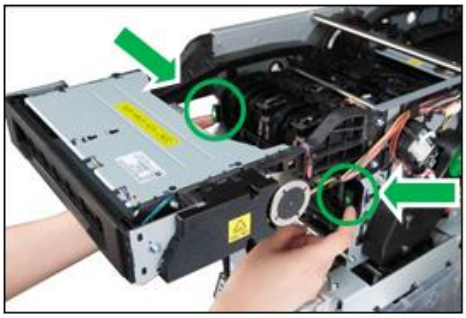

2. Pull the lever with both hands while pressing it inward (see the picture of 1)) and lift up **E** part as the below picture. Then remove the jammed bill.

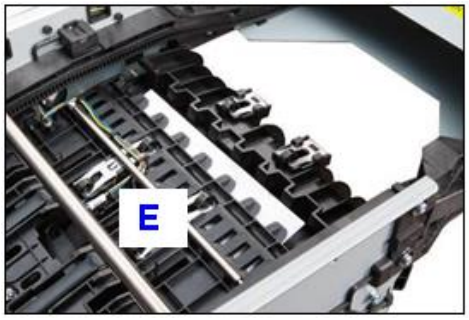

 © 2022 **Hyosung TNS.** All rights reserved.

Operation

3. Put down the **E** part and press the **D** part in the direction of arrow until it fixes.

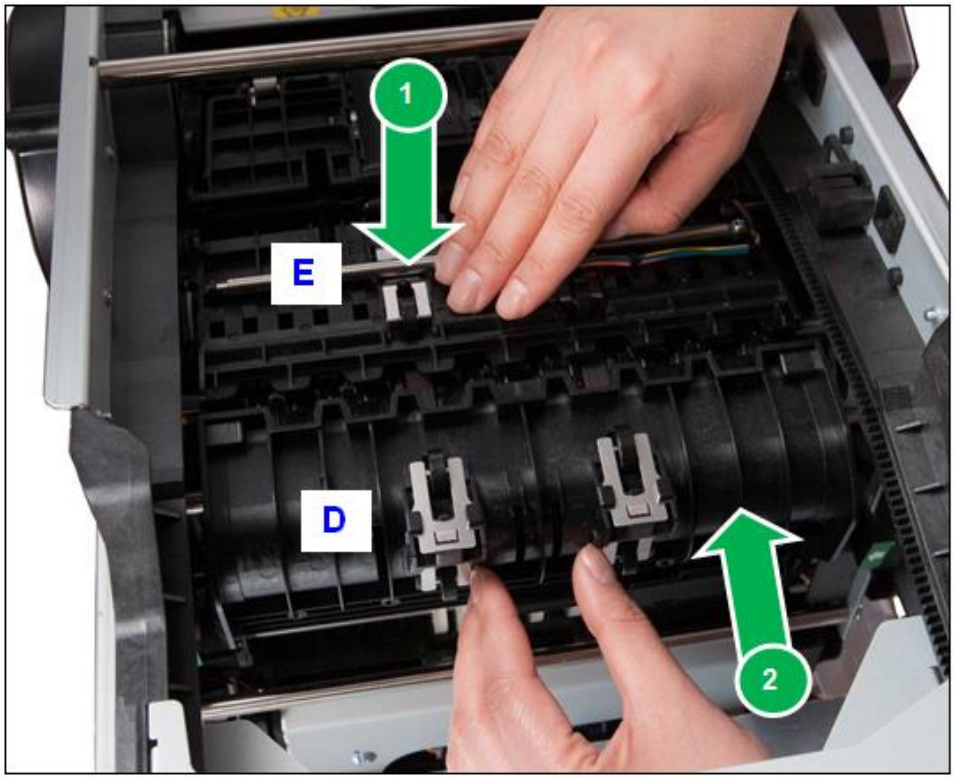

CAUTION:

DO NOT put down the E part after first closing the D part.

 © 2022 **Hyosung TNS.** All rights reserved.

Operation

Remove jam from the vertical transport path

Remove jam from the vertical transport path

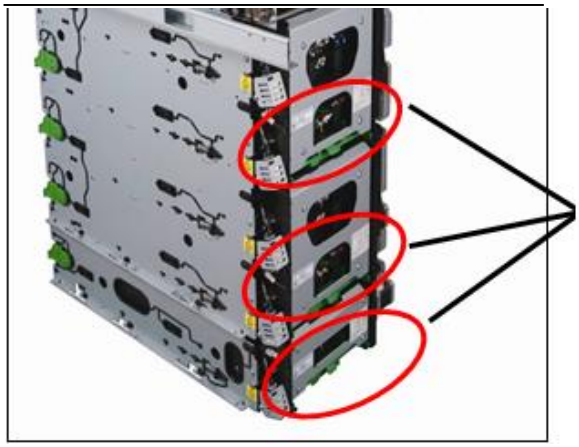

This position is where the jammed bill is

1. Pull the green lever of the bottom with lifting it up and open the **F** part. Then remove the bill.

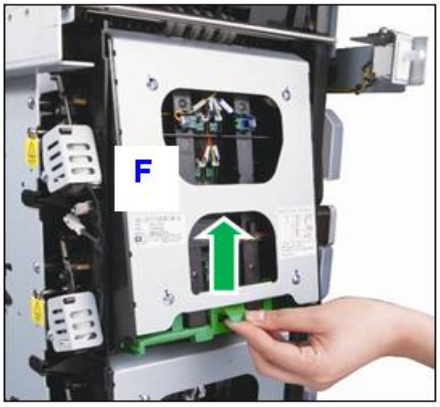

2. Press the lever with hand as the below picture until the **F** part fixes.

 © 2022 **Hyosung TNS.** All rights reserved.

Operation

Remove jam from the carriage

Remove jam from the carriage

1. Rotate the carriage by turning the knob (G) and remove the jammed bill.

2. After removing the jammed bill, turn the knob (**G**) and return the carriage to the original position.

 © 2022 **Hyosung TNS.** All rights reserved.

Operation

Remove jam from the transport path of the main body

Remove jam from the transport path of the main body

1. Turn the knob (**G**) and match the tooth form.

2. Lift up the carriage with hand and move it to the throat.

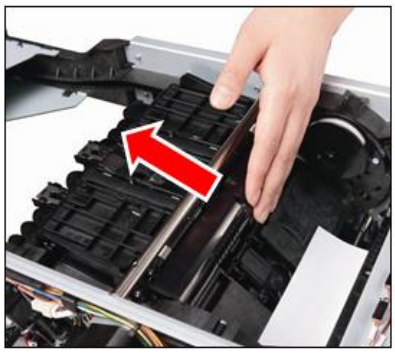

3. Turn the knob (G) and move the jammed bill to the location to clear it easily. Then remove the jammed bill.

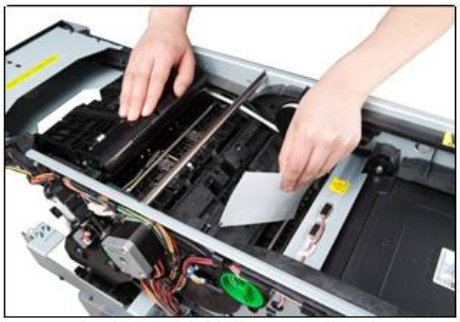

 © 2022 **Hyosung TNS.** All rights reserved.

Operation

Remove jam from the transport path of RJ/RT box

Remove jam from the transport path of RJ/RT box

1. Demount the Reject/Retract Box.
   (Refer to “How to empty the Reject/Retract Box.”)

2. Remove the jammed bills.

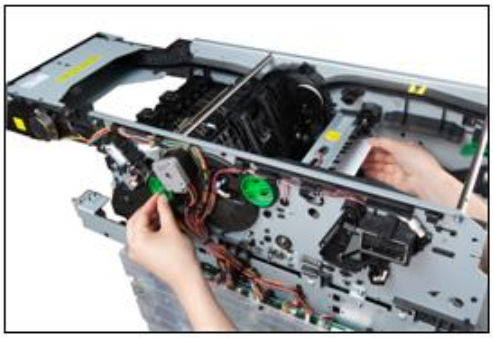

 © 2022 **Hyosung TNS.** All rights reserved.

Operation

Remove jam from the separation part

Remove jam from the separation part

1. Demount the cassette.
   (Refer to “How to replenish the Cash Cassette.”)

2. Remove the jammed bill as shown in below picture

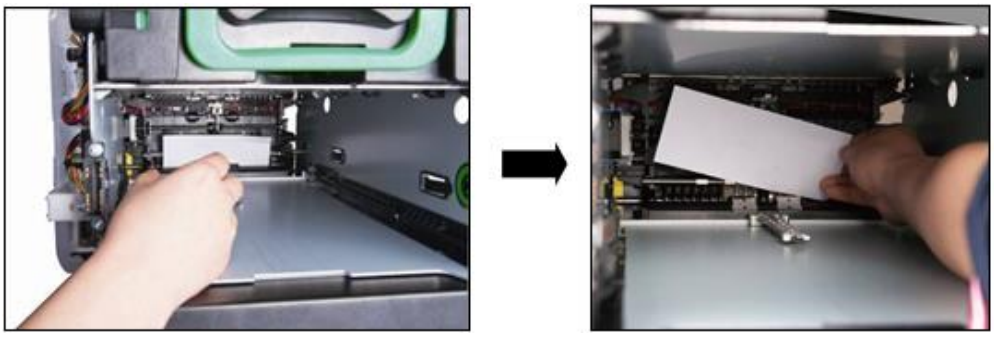

 © 2022 **Hyosung TNS.** All rights reserved.

Operation

Remove jam from the transport path of reject

Remove jam from the transport path of reject

1. Turn the Knob (H) clockwise or counterclockwise according to the location of the jam and remove the jammed bill.

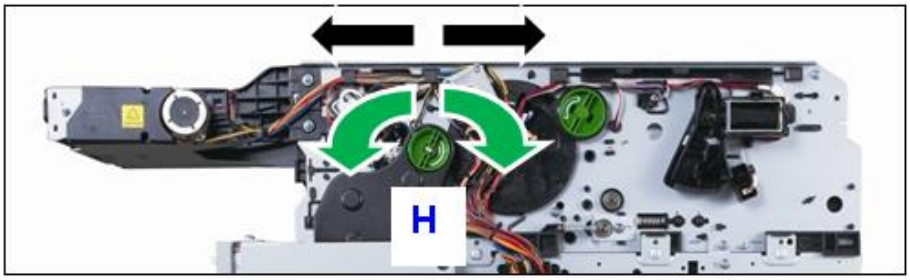

2. If turning the Knob (H) counterclockwise, the jammed bill will move in the direction of the Transport Path.

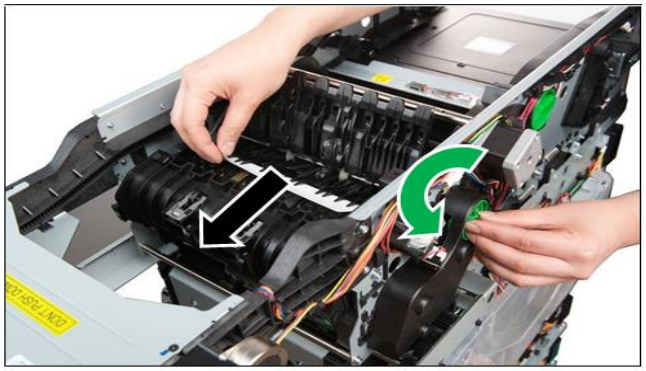

3. If turning the Knob (H) clockwise, the jammed bill will move in the direction of the RJ/RT Box.

 © 2022 **Hyosung TNS.** All rights reserved.

Operation

How to Reset Main Board

How to Reset Main Board

1. Press the hole in the red circle with a stick and reset.

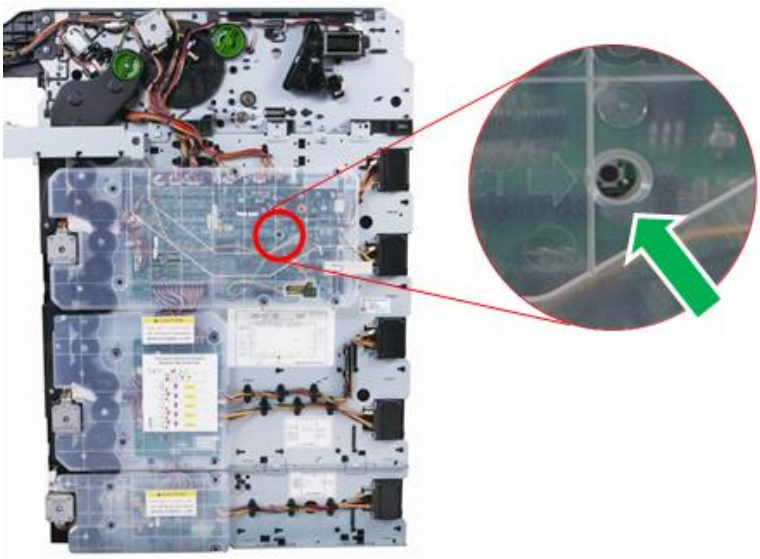

 © 2022 **Hyosung TNS.** All rights reserved.

Operation

How to set the Cassette for Each Denomination

Cassette Base Guide Setting for the Horizontal Size of Each Denomination

Cassette Base Guide Setting for the Horizontal Size of Each Denomination

1. Open the cassette cover as shown in below picture.

2. Pressing the green parts on the end of the shaft supporting the Push Plate with one hand, lift up the Push Plate and take it out with the other hand. Also take out the Push Plate on the other side in the same way.

3. Completely take out the Push Plate and gently place it inside the box.

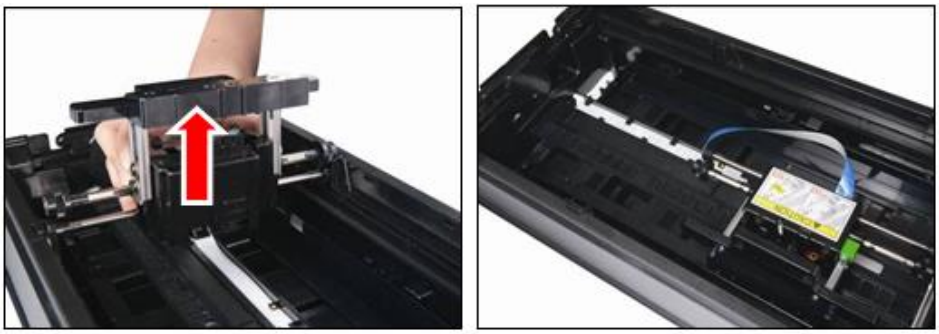

 © 2022 **Hyosung TNS.** All rights reserved.

Operation

4. Pressing the green part and slightly lifting it up, take out the Hook.

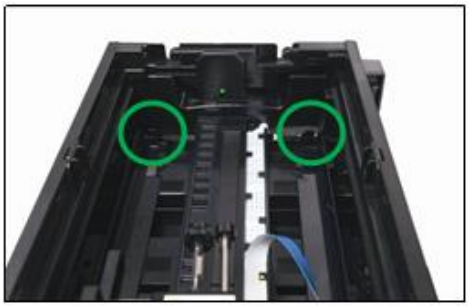


5. After taking out the Hook Part, push the Guide in the direction of yellow arrow and take it out.

6. Remove current 6 LOWER NOTE SPACER as shown in below. Press HOOK in the green arrow and pull up the Spacer.

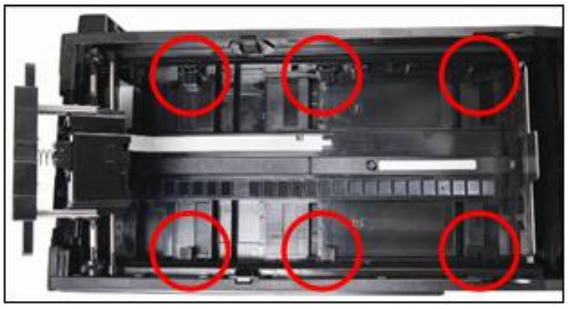
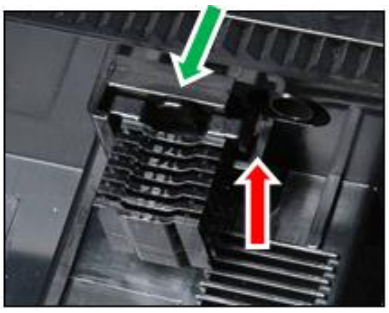

 © 2022 **Hyosung TNS.** All rights reserved.

Operation

7. Install proper new LOWER NOTE SPACER

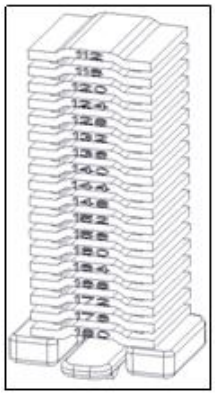

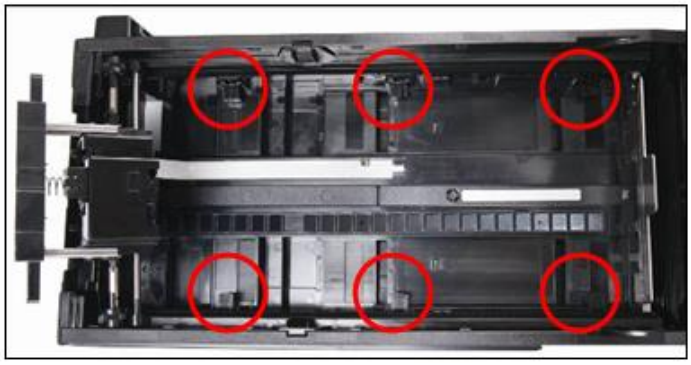

SPACER:NOTE_LOWER					
NO	**PART NO.**	**SIZE (mm)**	**NO**	**PART NO.**	**SIZE (mm)**
1	4460000158	112	9	4460000166	144
2	4460000159	116	10	4460000167	148
3	4460000160	120	11	4460000168	152
4	4460000161	124	12	4460000169	156
5	4460000162	128	13	4460000170	160
6	4460000163	132	14	4460000171	164
7	4460000164	136	15	4460000172	168
8	4460000165	140	16	4460000173	172

Recommended spacer for note size

8. For the desired denomination size, mount the Guide matching it with the white line. Press it until clicking sounds. (Mount the remaining guide in the same way.)

 © 2022 **Hyosung TNS.** All rights reserved.

Operation

9. Vertically insert two kinds of Shaft and turn the hand holding the Push Plate.

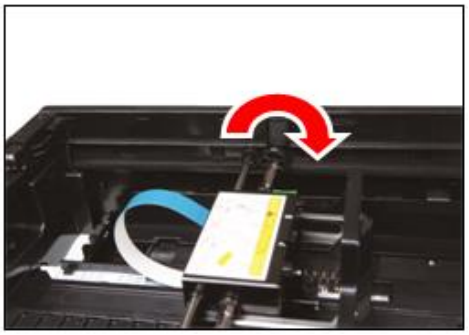

10. Then check whether A Shaft matches the white arrow. (The other side is same.)

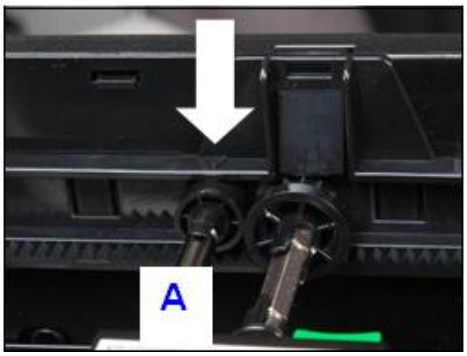

 © 2022 **Hyosung TNS.** All rights reserved.

Operation

Cassette Cover Guide Setting for the Vertical Size of Each Denomination

1. Unfasten the caught Hook in the arrow direction and gently take out the Guide pulling it in the **C** direction.

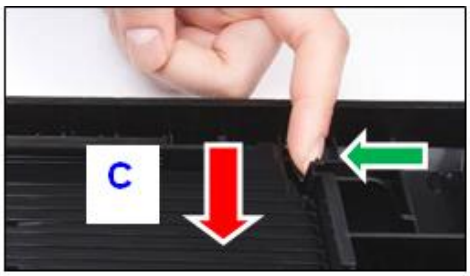

2. Also unfasten the Hook on the other side in the arrow direction and completely take out the Guide pulling it in the **C** direction.

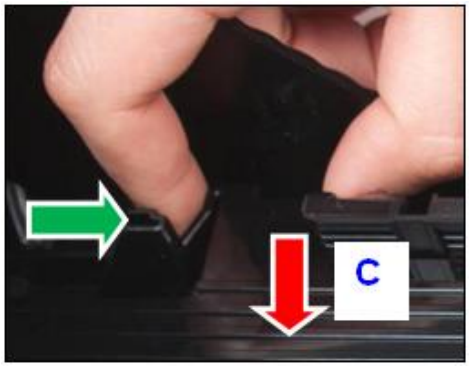

3. Remove 6 Upper note SPACER. Then lift up HOOK and pull out Spacer from guide

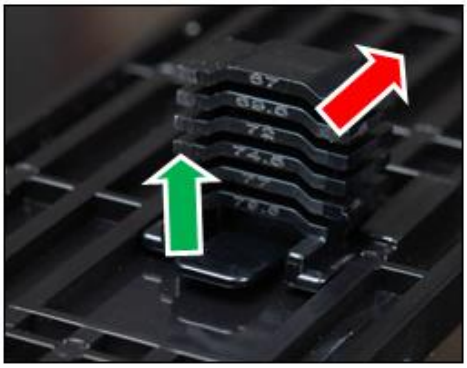

 © 2022 **Hyosung TNS.** All rights reserved.

Operation

4. Install proper new SPACER: NOTE_UPPER to Guide.

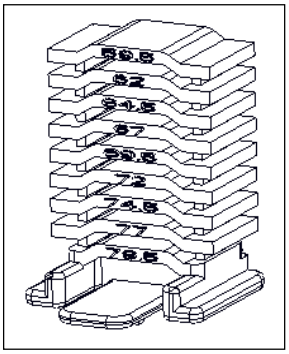

SPACER:NOTE_UPPER					
No.	**PART No.**	**SIZE (mm)**	**NO**	**PART NO.**	**SIZE (mm)**
1	4460000149	59.5	6	4460000154	72.0
2	4460000150	62	7	4460000155	74.5
3	4460000151	64.5	8	4460000156	77.0
4	4460000152	67	9	4460000157	79.5
5	4460000153	69.5			

Recommended spacer for note size

5. After matching the height (white line) with the desired bill size, push it in the arrow direction. However, be sure to push it after matching the height of the other side of the Guide.

6. After also matching the other side of the Guide with the height of the desired bill size, push it with both hands until the Hook is caught.

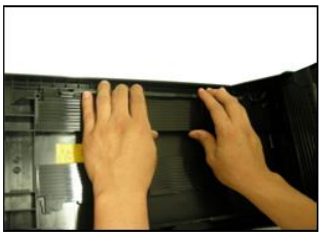

 © 2022 **Hyosung TNS.** All rights reserved.

Operation

Change Note Index

Change Note Index

1. After change, change the denomination label

1	2	5
10	20	50
100	200	500
1,000	2,000	5,000
10,000	20,000	50,000
100,000	200,000	500,000
1,000,000	2,000,000	5,000,000

Label Part No.: 5721001326

2. After adjust cassette have to change assigned denomination value in Supervisor mode.

<Note!>
To assign new denomination in supervisor mode, please contact software develops part or Technical Support Center.

 © 2022 **Hyosung TNS.** All rights reserved.